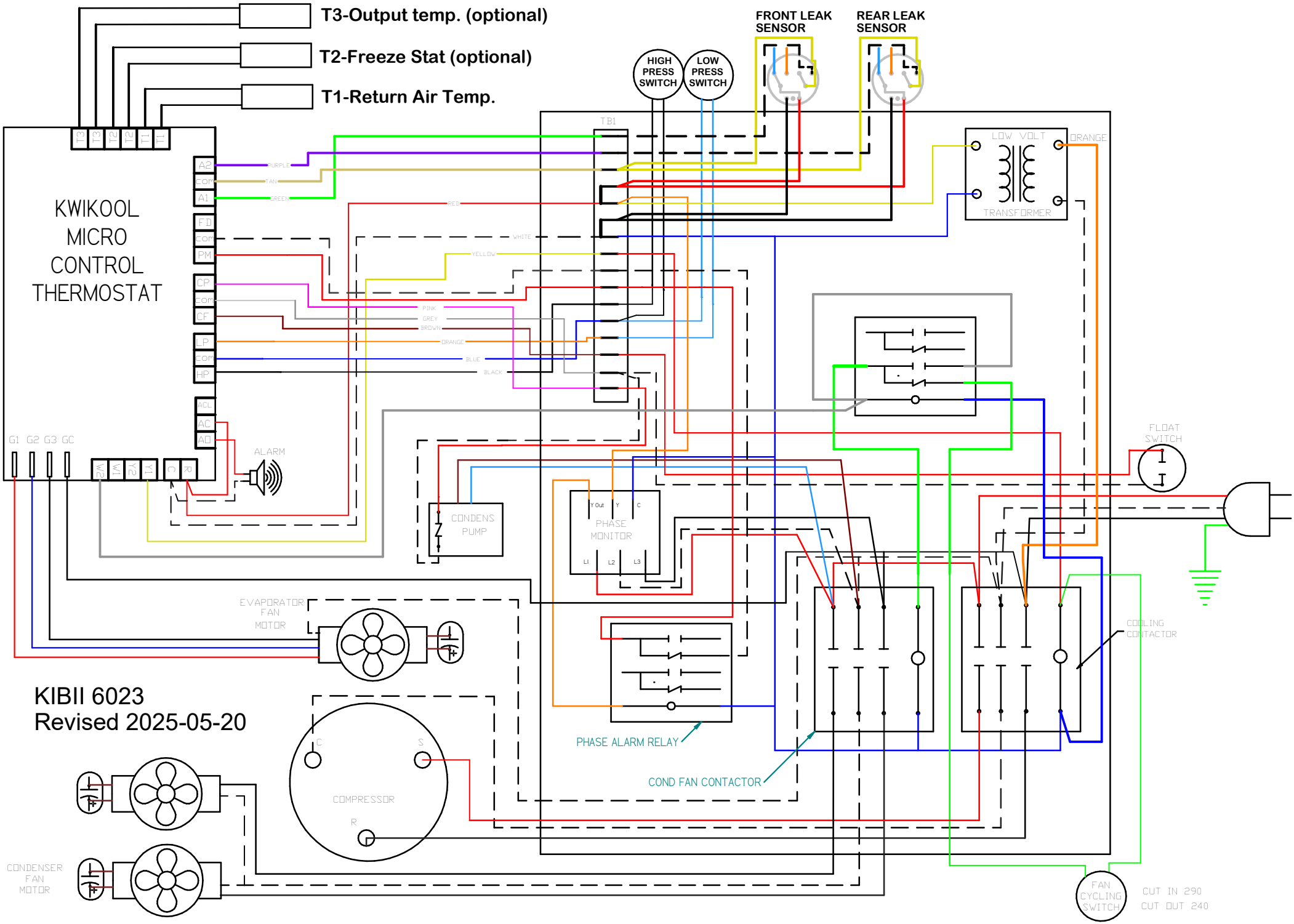
T3-Output temp. (optional)
T2-Freeze Stat (optional)
T1-Return Air Temp.
FRONT LEAK SENSOR
REAR LEAK SENSOR
HIGH PRESS SWITCH
LOW PRESS SWITCH
KWIKOOL MICRO CONTROL THERMOSTAT
T3 T2 T1
A2 Com A1
FD Com PM
CP Com CF
LP Com HP
AD AC AD
G1 G2 G3 GC
W2 W1 Y2 Y1 C R
TB1
LOW VOLT
ORANGE
TRANSFORMER
PURPLE
TAN
GREEN
RED
WHITE
YELLOW
PINK
GREY
BROWN
ORANGE
BLUE
BLACK
ALARM
FLOAT SWITCH
CONDENS PUMP
PHASE MONITOR
Y Out Y C
L1 L2 L3
EVAPORATOR FAN MOTOR
COOLING CONTACTOR
KIBII 6023
Revised 2025-05-20
PHASE ALARM RELAY
COND FAN CONTACTOR
C S
COMPRESSOR
R
CONDENSER FAN MOTOR
FAN CYCLING SWITCH
CUT IN 290
CUT OUT 240