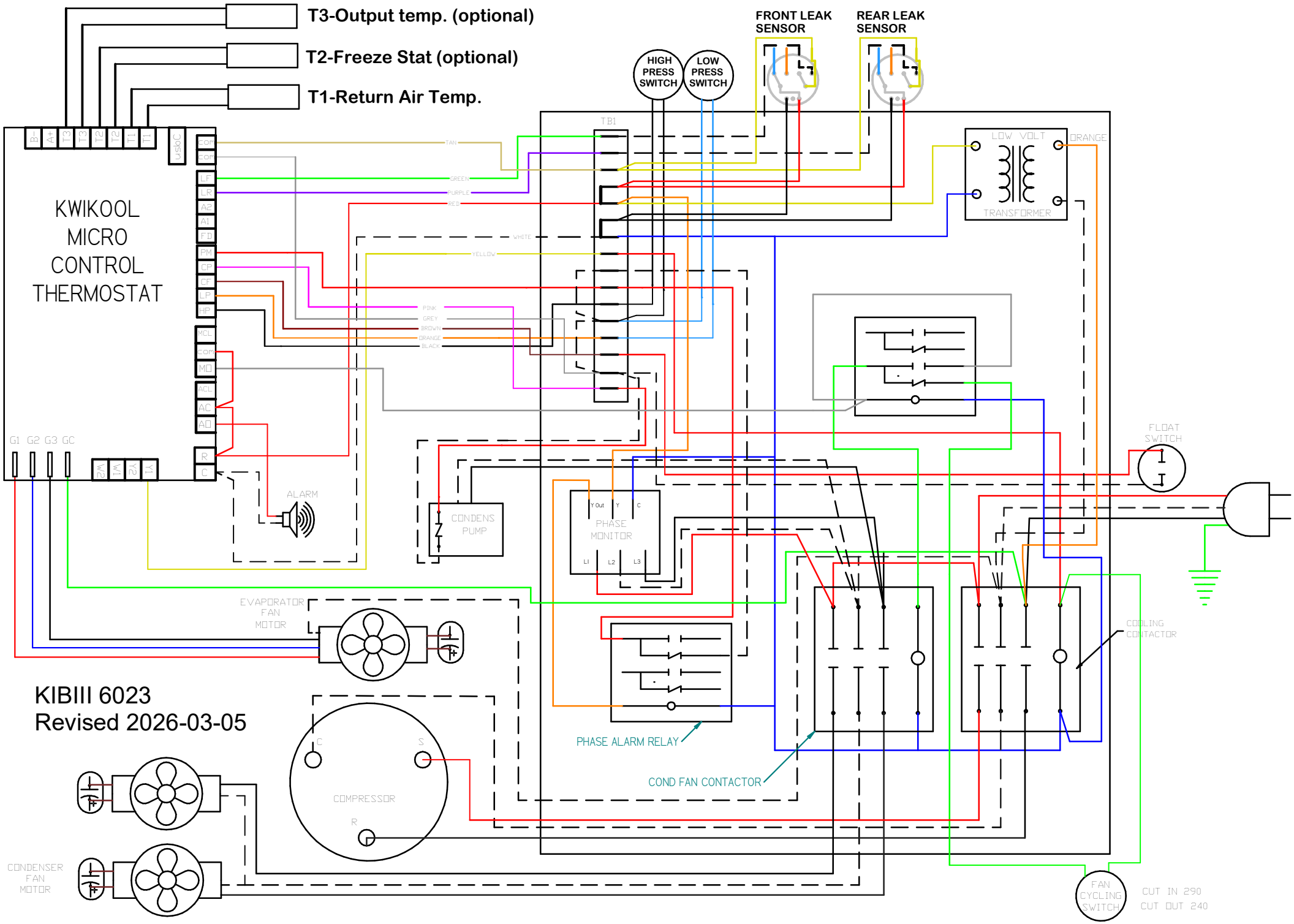
T3-Output temp. (optional)
T2-Freeze Stat (optional)
T1-Return Air Temp.
FRONT LEAK SENSOR
REAR LEAK SENSOR
HIGH PRESS SWITCH
LOW PRESS SWITCH
KWIKOOL MICRO CONTROL THERMOSTAT
B
A+
T3
T3
T2
T2
T1
T1
USBOC
com
com
LF
LR
A2
A1
FD
PM
CP
BF
LP
HP
MCL
com
MO
ACL
AC
AO
R
C
G1 G2 G3 GC
W2
W1
Y2
Y1
TB1
TAN
GREEN
PURPLE
RED
WHITE
YELLOW
PINK
GREY
BROWN
ORANGE
BLACK
LOW VOLT
ORANGE
TRANSFORMER
FLOAT SWITCH
ALARM
CONDENS PUMP
Y Out
Y
C
PHASE MONITOR
L1
L2
L3
EVAPORATOR FAN MOTOR
COOLING CONTACTOR
PHASE ALARM RELAY
COND FAN CONTACTOR
C
S
COMPRESSOR
R
CONDENSER FAN MOTOR
FAN CYCLING SWITCH
CUT IN 290
CUT OUT 240
KIBIII 6023
Revised 2026-03-05