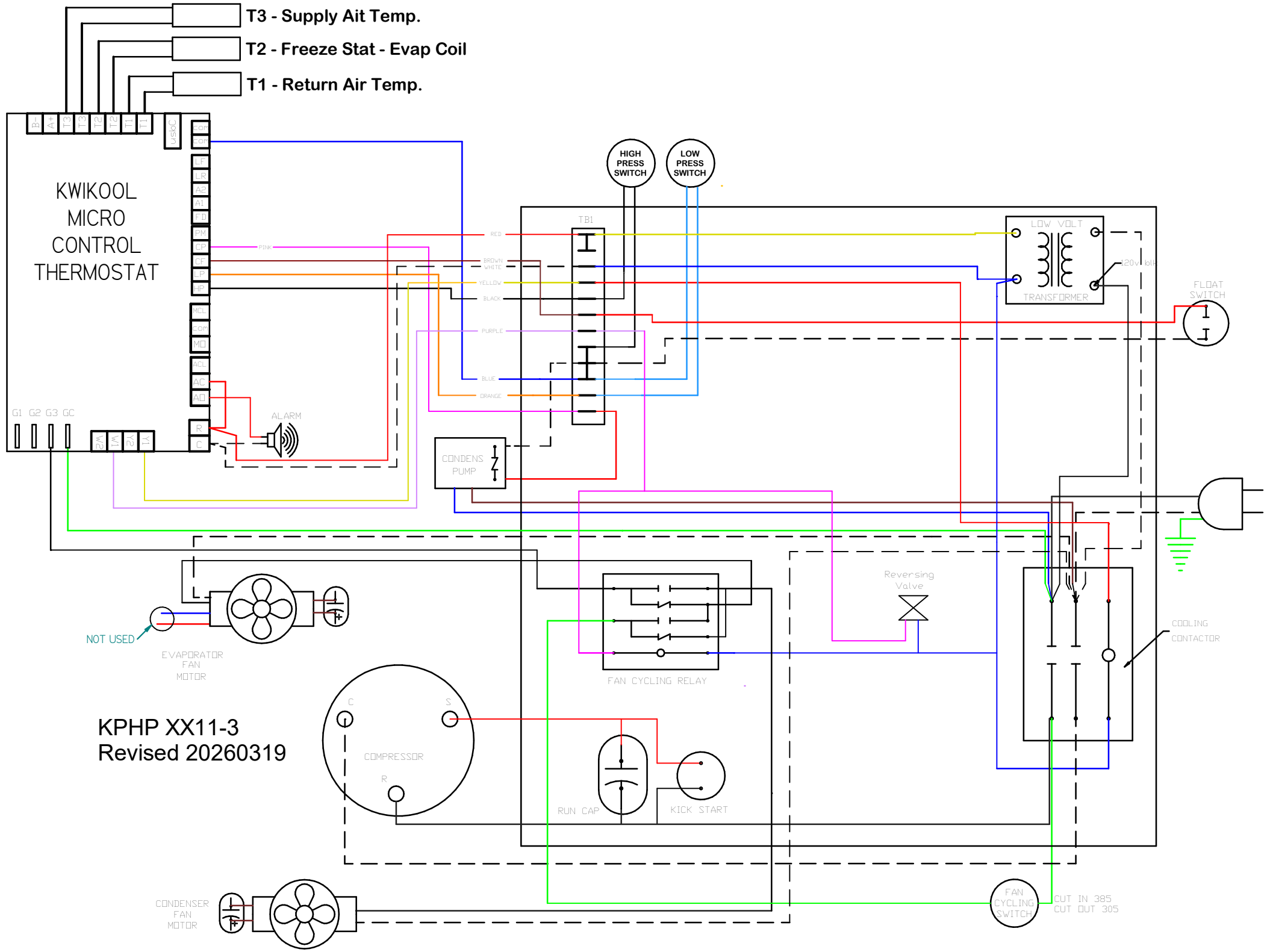
T3 - Supply Ait Temp.
T2 - Freeze Stat - Evap Coil
T1 - Return Air Temp.
KWIKOOL
MICRO
CONTROL
THERMOSTAT
HIGH PRESS SWITCH
LOW PRESS SWITCH
TB1
LOW VOLT
TRANSFORMER
120volt
FLOAT SWITCH
ALARM
CONDENS PUMP
NOT USED
EVAPORATOR FAN MOTOR
FAN CYCLING RELAY
Reversing Valve
COOLING CONTACTOR
COMPRESSOR
RUN CAP
KICK START
CONDENSER FAN MOTOR
FAN CYCLING SWITCH
CUT IN 385
CUT OUT 305
KPHP XX11-3
Revised 20260319